D4-180I-B, D4-210I-A, D4-210I-B, D4-210A-A, D4-210A-B, D4-225I-B, D4-225A-B, D4-260I-A, D4-260I-B

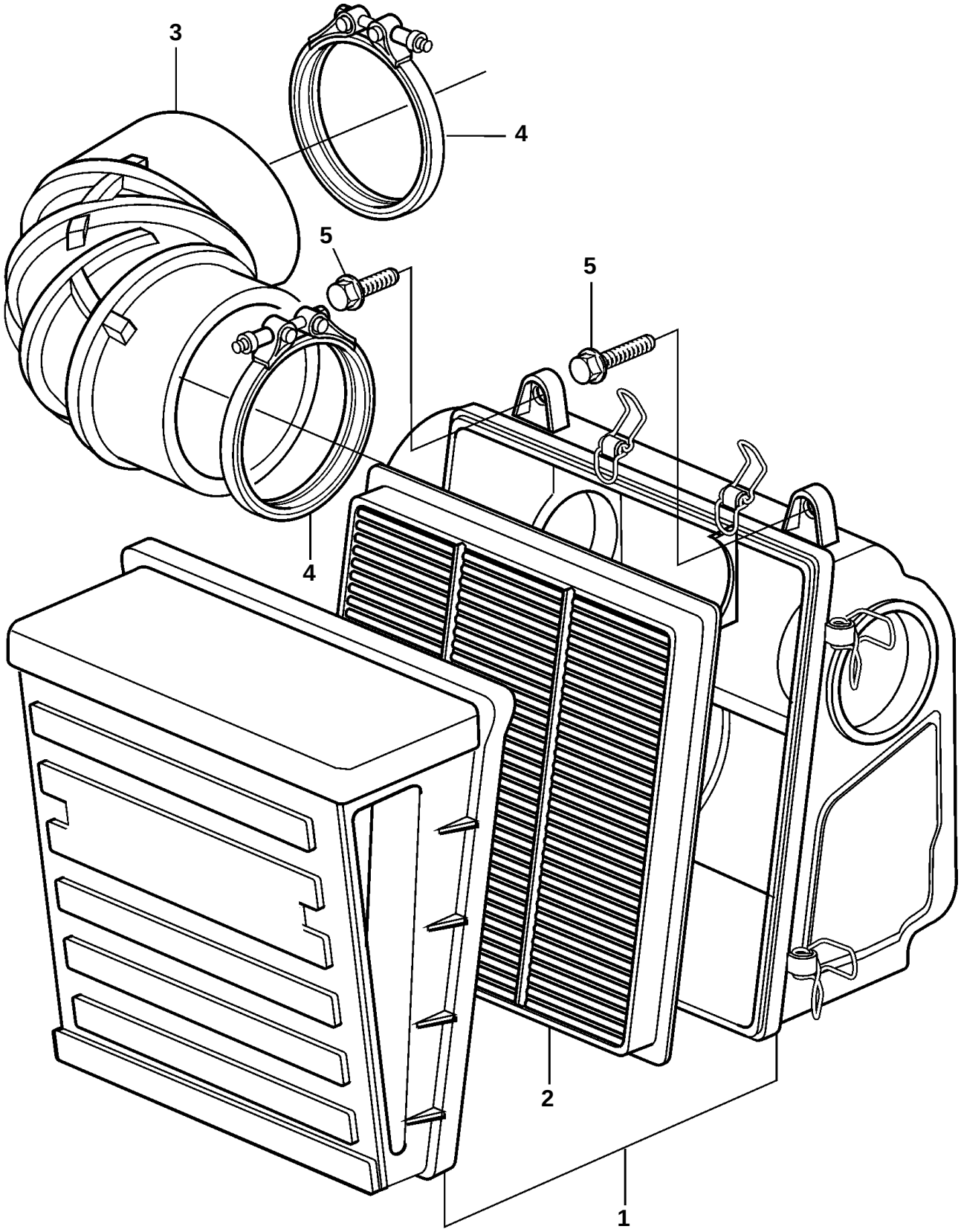

19897

D4-180I-B, D4-210I-A, D4-210I-B, D4-210A-A, D4-210A-B, D4-225I-B, D4-225A-B, D4-260I-A, D4-260I-B

REF	PART NO.	QTY	DESCRIPTION	
1	3583854	1	Air filter	
2	3583654	1	Air filter insert	
3	3584004	1	Hose	
4	982694	2	Hose clamp	
5	945444	2	Flange screw	